ZANEEN®

| | |
|---|---|
| PROJECT | |
| TYPE | |
| SPECIFIER | |
| QUANTITY | |
| DATE | |

# BIONIQ SQUARE DEEP COMFORT TRIMLESS

**A35221-** _____ - _____ - _____ - _____ - _____ - _____ - _____

| base number | LED Dimming | Color Temperature | Finishes (Diamond) | Finishes (Triangle) | Finishes (Circle) | Ceiling Thickness | Reflector Options |
|---|---|---|---|---|---|---|---|

*1.To build a product code in our configurator select the specify button on the base model # product page*
*2. To build a manual product code on this datasheet choose from the options listed below in blue font and add the suffix to the base model #*

## GENERAL

Series: Bioniq
Subseries: Bioniq Square Deep Comfort
Brand: Prolicht
Division: Architectural
Mounting Type: Trimless
Mounting Location: Ceiling
Subcategory: Downlight

## PHYSICAL

Shape: Square
Length (mm): 106
Length (in): 4 3/16
Width (mm): 106
Width (in): 4 3/16
Height (mm): 150
Height (in): 5 7/8
Ceiling Thickness (mm): 10 / 12.5 / 15 / 25
Ceiling Thickness (in): 3/8 or 1/2 or 9/16 or 1
Min. Recessing Depth (mm): 170
Min. Recessing Depth (in): 6 11/16
Light Distribution: Downlight
Weight (kg): 0.717
Weight (lbs): 1.58
Fixture Finish: SSR / BKV / CWI / CRY / HAB / LAG / UFT / ITA / RUA / RUR / MIC / FTG / MYG / TWT / LOD / PUS / FRO / FUP / KIA / POP / BLS / SPG / MEY / GOH / GUM / CHC / COM / ABZ / JAG / OBR / MOS / ROR
Fixture Material: Aluminum Die Cast
Cut-out Measurements: 120mm / 4 3/4" x 120mm / 4 3/4"
Upon Request: Unique Ceiling Thickness

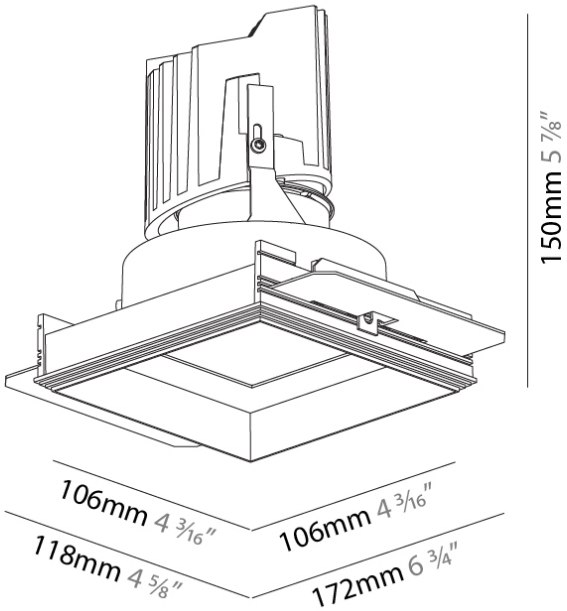


## ELECTRICAL

Lamp Type: LED (Zhaga Standard)
Input Wattage (W): 15.5
Total Output Wattage (W): 14.5
Dimming: Tri-Mode (Non-Dimming and Phase Dimming (120Vac only) and 0-10V Dimming)
Driver Included: No
Driver Location: Recessed Housing
Driver Type: Constant Current - Universal
Driver Class: Class 2
Housing: See components
Input Voltage (V): 120 - 277
Constant Current (MA): 500

## LED

Number of LEDs: 1
Color Temperature (°K): 2700 / 3000 / 3500 / 4000
Max. Delivered Lumen (lm): 940 / 980 / 1029 / 1050
Nominal Lumen (lm): 1386 / 1438 / 1511 / 1542
CRI: >90 CRI
Efficiency (%): 87.9 / 88.4 / 87.9
Lamp Life (hrs): 50000
Upon Request: RGB-W Tunable White Special Color Temperature Special LED

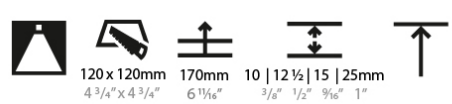


A

## OPTICAL

Reflector°: 20 / 40 / 60
Upon Request: Special Beam Angles

## RATINGS AND CERTIFICATIONS

Certified By: Certified for North American Standards
IP rating: IP20



Zaneen Group Inc. © 2024 T 800-388-3382, F 416-247-9319, www.zaneen.com

Available for International specifications by adding 'INT' at the end of the existing Model #. For assistance on 'custom' specifications, contact zteam@zaneen.com.
In a constant effort to supply the best product, we reserve the right to change specifications or materials without notice. The most recent specification sheets are found at zaneen.com

June 5, 2024, 7:54 pm

ZANEEN®

| | |
|---|---|
| PROJECT | |
| TYPE | |
| SPECIFIER | |
| QUANTITY | |
| DATE | |

# BIONIQ SQUARE DEEP COMFORT TRIMLESS

A35221-

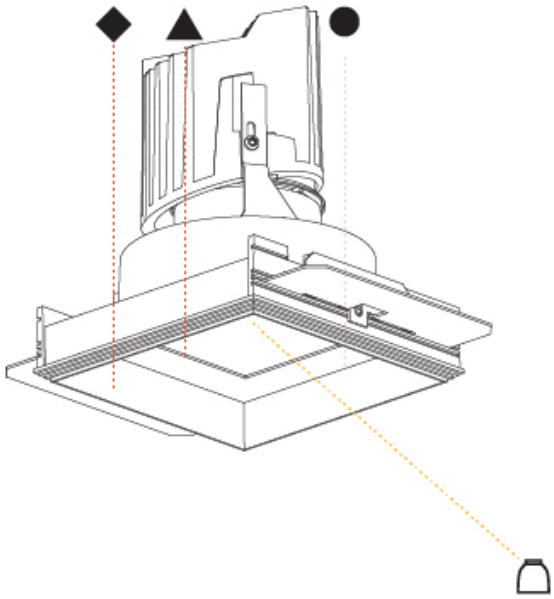

A



Zaneen Group Inc. © 2024, T 1800-388-3382, F 416-247-9319, www.zaneen.com

Available for International specifications by adding 'INT' at the end of the existing Model #. For assistance on 'custom' specifications, contact zteam@zaneen.com.
In a constant effort to supply the best product, we reserve the right to change specifications or materials without notice. The most recent specification sheets are found at zaneen.com

ZANEEN®

| | |
|---|---|
| PROJECT | |
| TYPE | |
| SPECIFIER | |
| QUANTITY | |
| DATE | |

# BIONIQ SQUARE DEEP COMFORT TRIMLESS

**A35533-** ____ - ____ - ____ - ____

| base number | Finishes (Diamond) | Finishes (Triangle) | Ceiling Thickness | Reflector Options |
|---|---|---|---|---|

*1.To build a product code in our configurator select the specify button on the base model # product page*
*2. To build a manual product code on this datasheet choose from the options listed below in blue font and add the suffix to the base model #*

**GENERAL**

Series: Bioniq
Subseries: Bioniq Square Deep Comfort
Brand: Prolicht
Division: Architectural
Mounting Type: Trimless
Mounting Location: Ceiling
Subcategory: Downlight

**PHYSICAL**

Shape: Square
Length (mm): 106
Length (in): 4 3/16
Width (mm): 106
Width (in): 4 3/16
Height (mm): 150
Height (in): 5 7/8
Ceiling Thickness (mm): 10 / 12.5 / 15 / 25
Ceiling Thickness (in): 3/8 or 1/2 or 9/16 or 1
Min. Recessing Depth (mm): 170
Min. Recessing Depth (in): 6 11/16
Light Distribution: Downlight
Weight (kg): 0.769
Weight (lbs): 1.69
Fixture Finish: SSR / BKV / CWI / CRY / HAB / LAG / UFT / ITA / RUA / RUR / MIC / FTG / MYG / TWT / LOD / PUS / FRO / FUP / KIA / POP / BLS / SPG / MEY / GOH / GUM / CHC / COM / ABZ / JAG / OBR / MOS / ROR
Fixture Material: Aluminum Die Cast
Cut-out Measurements: 120mm / 4 3/4" x 120mm / 4 3/4"
Upon Request: Unique Ceiling Thickness

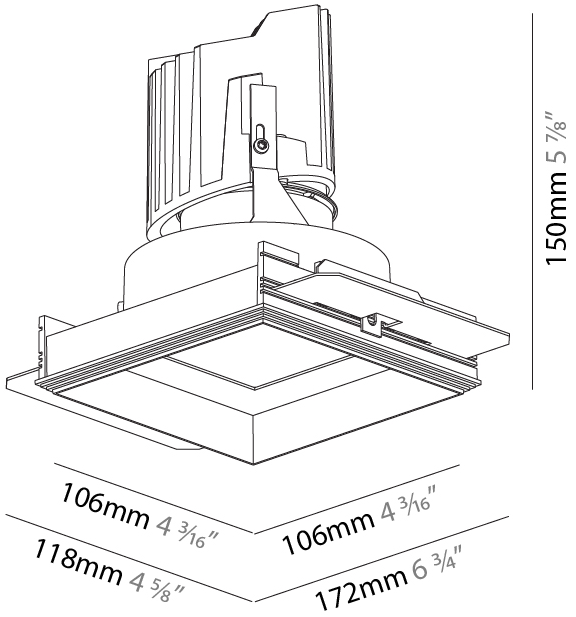


**ELECTRICAL**

Lamp Type: LED (Zhaga Standard)
Input Wattage (W): 16.5
Total Output Wattage (W): 14.7
Dimming: Dali Dimming
Driver Included: No
Driver Location: Recessed Housing
Driver Type: Constant Current - 120Vac
Driver Class: Class 2
Housing: See Components
Input Voltage (V): 120
Constant Current (MA): 350

**LED**

Number of LEDs: 1
Max. Delivered Lumen (lm): 770
Nominal Lumen (lm): 1140
CRI: >90 CRI
Lamp Life (hrs): 50000
Upon Request: RGB-W Tunable White Special Color Temperature Special LED

**OPTICAL**

Reflector°: 20 / 40 / 60
Upon Request: Special Beam Angles

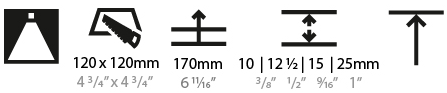


A

**RATINGS AND CERTIFICATIONS**

Certified By: Certified for North American Standards
IP rating: IP20



Zaneen Group Inc. © 2024, T 1800-388-3382, F 416-247-9319, www.zaneen.com
Available for International specifications by adding 'INT' at the end of the existing Model #. For assistance on 'custom' specifications, contact zteam@zaneen.com.
In a constant effort to supply the best product, we reserve the right to change specifications or materials without notice. The most recent specification sheets are found at zaneen.com

June 5, 2024, 7:54 pm

ZANEEN®

| | |
|---|---|
| PROJECT | |
| TYPE | |
| SPECIFIER | |
| QUANTITY | |
| DATE | |

# BIONIQ SQUARE DEEP COMFORT TRIMLESS

A35533-

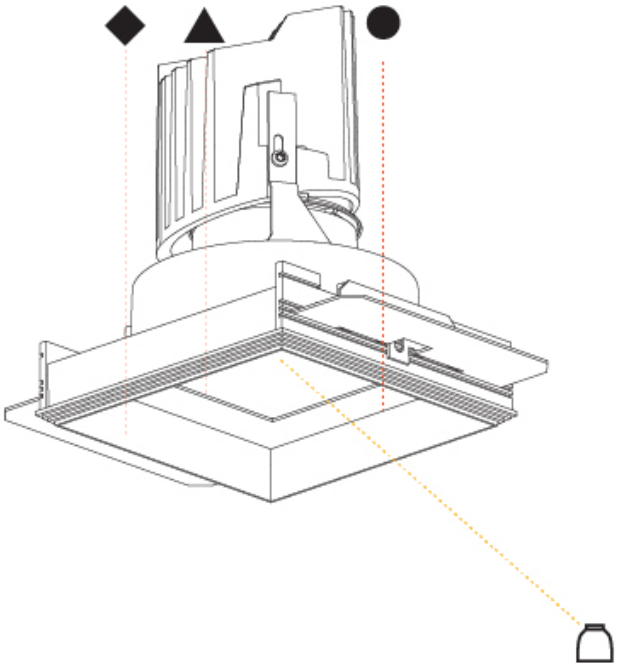

A



Zaneen Group Inc. © 2024, T 1800-388-3382, F 416-247-9319, www.zaneen.com

Available for International specifications by adding 'INT' at the end of the existing Model #. For assistance on 'custom' specifications, contact zteam@zaneen.com.
In a constant effort to supply the best product, we reserve the right to change specifications or materials without notice. The most recent specification sheets are found at zaneen.com

ZANEEN®

# BIONIQ

## COLOR FINISH CHART

| | |
|---|---|
| PROJECT | |
| TYPE | |
| SPECIFIER | |
| QUANTITY | |
| DATE | |

### Fixture Finish

Sparkling Silver - 01 (SSR)

Black Velvet - 02 (BKV)

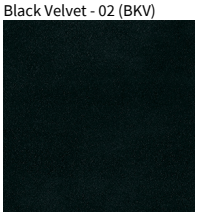

Crystal White - 03 (CWI)

Creamy - 04 (CRY)

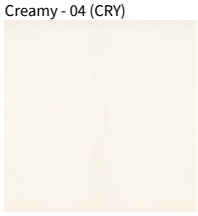

Hampton Bay - 05 (HAB)

Lagoon - 06 (LAG)

Urban Forest - 07 (UFT)

In the Army - 08 (ITA)

Rusty Angel - 09 (RUA)

Rusty Rush - 10 (RUR)

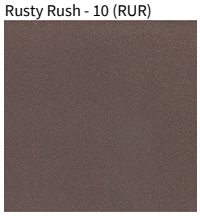

Milk and Chocolate - 11 (MIC)

Fade to Gray - 12 (FTG)

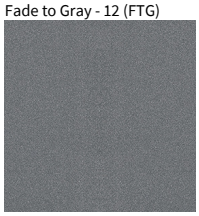

Mysterious Gray - 13 (MYG)

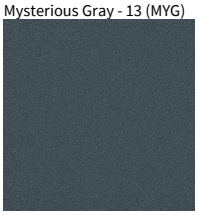

Twilight - 14 (TWT)

Lost Dream - 15 (LOD)

Purple Sky - 16 (PUS)

Fresh Oh - 17 (FRO)

Funky P. - 18 (FUP)

Kissing Aphrodite - 19 (KIA)

Poseidon's Paradise - 20 (POP)

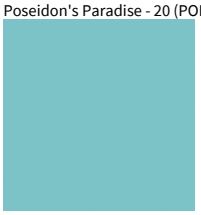

Blue Sky - 21 (BLS)

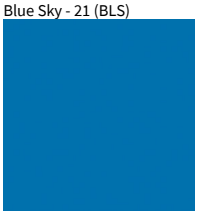

Spring Green - 22 (SPG)

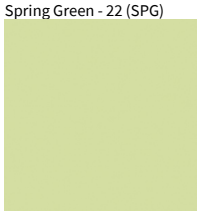

Mellow Yellow - 23 (MEY)

Golden Heart - 24 (GOH)

Gun Metal - 25 (GUM)

Champagne Cream - 26 (CHC)

Copper Mine - 27 (COM)

Ancient Bronze - 28 (ABZ)

Jazz Gold - 29 (JAG)

Olive Breeze - 30 (OBR)

Moonlight Silver - 31 (MOS)

Rosewood Red - 32 (ROR)

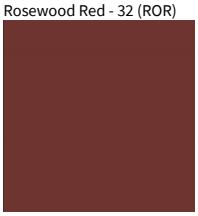

**Digital:** Not all screens are calibrated the same, and therefore, colors will appear differently betwee

**Physical:** When texture is involved, there will be variations in color, character and tone within a pro and between product families.

**Gun Metal:** No Gun Metal finish is alike. It combines a mixture of transparent and black color partic nsures a highly individual effect and no luminaire being identical.

**Champagne Cream, Copper Mine, Ancient Bronze + Jazz Gold:** These finishes have slight fading from specific powder coating production. Each luminaire will slightly vary.



Zaneen Group Inc. © 2024, T 1800 388 3382, T 416 247 9319, www.zaneen.com

Available for International specifications by adding 'INT' at the end of the existing Model #. For assistance on 'custom' specifications, contact zteam@zaneen.com.

In a constant effort to supply the best product, we reserve the right to change specifications or materials without notice. The most recent specification sheets are found at zaneen.com

June 5, 2024, 7:54 pm

ZANEEN®

# BIONIQ

| | |
|---|---|
| PROJECT | |
| TYPE | |
| SPECIFIER | |
| QUANTITY | |
| DATE | |

## LEGEND

| | | | | | |
|---|---|---|---|---|---|
| | floor-mounted | | pivotable | | special LED (upon request) RGB, RGBW, tunable, gold+, meat+, art+, fashion+ |
| | wall and ceiling: recessed and surface mounted | | rotating | | warm dim / natural dimming LED |
| | ceiling-mounted and wall-mounted | | illuminate tilted | | rechargeable battery powered |
| | wall-mounted | | color of suspension cable | | fixture with natural vivid LED (upon request) |
| | omni-directional light distribution | | length of suspension cable | CRI | color rendering index |
| | direct light distribution | | reflector degree selection | °K | color temperature |
| | direct/indirect light distribution | | super spot | LM | lumen (luminous flux) |
| | indirect light distribution | | lens | LM/W | efficacy (lumens per watt) |
| | asymmetric light distribution | | lens pack | UGR | Unified Glare Rating (UGR) range from 5-40 |
| | aura light distribution | | shine ring | 316 | marine grade (AISI 316 stainless steel) |
| | round wall or ceiling cut-out | | integrated shine ring with diffuser | | walk on |
| | square wall or ceiling cut-out | | free individual colors 01-29 | | drive on |
| | the supplied jig specifies the cutout dimensions | | individual colors: 00 (free of charge), 01-25 (extra charge) | DSC | Dark Sky Compliance |
| M | minimum distance (meters) lamp - object | | luminaire part to be colored (F1) | | Americans with Disabilities Act (less than 4" off the wall located between 27"-84" from floor) |
| | recessed depth | | luminaire part to be colored (F2) | | lamp protected against explosion |
| | ceiling thickness in mm | | luminaire part to be colored (F3) | | blown glass using traditional methods by master glass blower |
| | ceiling thickness selection | | luminaire part to be colored (F4) | | acoustic material |
| | dimmable DP (phase), DV (0-10V), DD (dali), DS (step-dim) | | luminaire part to be colored (F5) | | protection class I, protection insulation |
| | included or excluded LED driver/transformer/ control gear | | color of 3-circuit adaptor | | protection class II, protection insulation |
| | separately switchable | | indirect diffuser | | ETL Certified to UL and CSA Standards |
| | sensor | D | direct diffuser | | UL Certified to UL and CSA Standards |
| | remote control | | ball-proof (upon request) | | CSA Certified to UL and CSA Standards |
| | available upon request | | accessory | | Certified for North American Standards |

## IP RATING

| | |
|---|---|
| IP20 | protected against ingress of solid bodies greater than 12.5mm (finger) |
| IP33 | protected against ingress of solid bodies greater than 2.5mm<br>protected against sprays of water up to 60 degrees from the vertical (rain) |
| IP40 | protected against ingress of solid bodies greater than 1mm (wire)<br>no protection against the ingress of moisture |
| IP43 | protected against ingress of solid bodies greater than 1mm (wire)<br>protected against sprays of water up to 60 degrees from the vertical (rain) |
| IP44 | protected against ingress of solid bodies greater than 1mm (wire)<br>protected against water splashed from all directions |
| IP54 | protected against limited ingress of dust (wet rooms/covered outdoor areas)<br>protected against water splashed from all directions |
| IP65 | protected against ingress of dust<br>protected against jets of water |
| IP66 | protected against ingress of dust<br>protected against powerful jets of water or heavy seas |
| IP67 | protected against ingress of dust<br>protected against immersion of water between 15cm - 1m for 30 minutes |
| IP68 | protected against ingress of dust<br>protected against immersion of water under pressure for long periods |

## IK RATING

| | |
|---|---|
| IK01 | protected against 0.14 joules impact (equivalent to 0.25kg mass dropped from 56mm above the surface) |
| IK02 | protected against 0.2 joules impact (equivalent to 0.25kg mass dropped from 80mm above the surface) |
| IK03 | protected against 0.35 joules impact (equivalent to 0.25kg mass dropped from 140mm above the surface) |
| IK04 | protected against 0.5 joules impact (equivalent to 0.25kg mass dropped from 200mm above the surface) |
| IK05 | protected against 0.7 joules impact (equivalent to 0.25kg mass dropped from 280mm above the surface) |
| IK06 | protected against 1 joules impact (equivalent to 0.25kg mass dropped from 400mm above the surface) |
| IK07 | protected against 2 joules impact (equivalent to 0.5kg mass dropped from 400mm above the surface) |
| IK08 | protected against 5 joules impact (equivalent to 1.7kg mass dropped from 300mm above the surface) |
| IK09 | protected against 10 joules impact (equivalent to 5.0kg mass dropped from 200mm above the surface) |
| IK10 | protected against 20 joules impact (equivalent to 5.0kg mass dropped from 400mm above the surface) |